GX CARTRIDGE FILTER

Key	Description	Product Code	Qty Required
1	BRASS O RING-AIR BLEED SOCKET -GX F	78102	3
2	BRASS INSERT -AIR BLEED SOCKET - GX	78093	3
3	O RING - AIR BLEED SOCKET - GX / Z	78103	2
4	PLUG - AIR BLEED SOCKET - GX/ ZX F	78207	2
5	PRESSURE GAUGE - LIQUID FILLED DUAL	75032	1
6	FILTER TANK - GX CARTRIDGE - TOP	75017	1
7	CLAMP BAND - GX FILTER (HALF)	78107	2
8	MANIFOLD - TOP - GX FILTER	75019	1
9	FILTER ELEMENT - GX100 / CL400	78083	4
	FILTER ELEMENT - GX150 / CL600	78084	4
10	MANIFOLD - BOTTOM - GX FILTER	75022	1
11	O RING - BODY - GX FILTER	78109	1
12	FILTER TANK - GX CARTRIDGE - BOTTO	75018	1
13	BASE - GX FILTER	75014	1
14	USE PART NO 75109 - BOOK MISTAKE	70000	2
15	TAIL UNION - 50MM ABS	950920	2
16	LOCK NUT UNION - 50MM	950919	2
17	O RING - 50MM UNION	70003	2
18	TAIL UNION 50MM -THREADED	950921	2
19	MANIFOLD PIPE - LOWER ASSEMBLY - GX	78110	1
20	MANIFOLD PIPE - UPPER ASSEMBLY - GX	78111	1
	MANIFOLD PIPE - UPPER ASSEMBLY - GX	78178	1
21	O'RING UPPER MANIFOLD - GX FILTER	70015	1

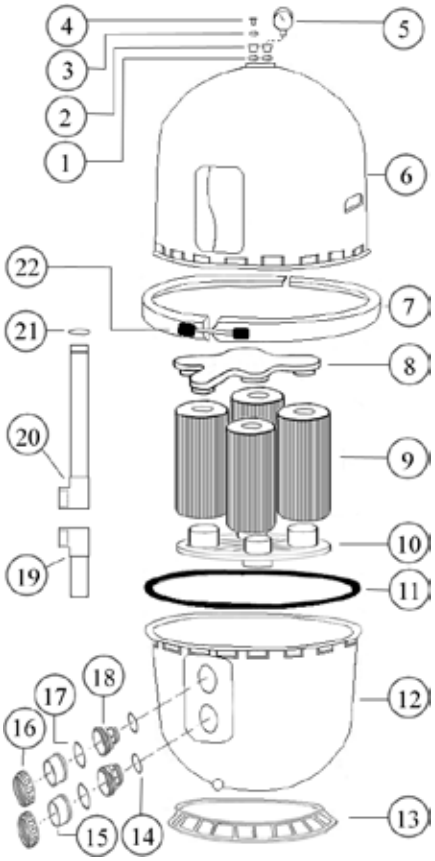

Rainbow Pool Products
PO Box 2388, Mansfield Qld 4122
Telephone STD 61-7-3849 5385
Facsimile STD 61-7-3849 5384
Email: info@rainbowpoolproducts.com.au
Web: www.rainbowpoolproducts.com.au